+386 (0)59 071 390
prodaja@minitec.si
05.05.2026

ANGLE 45 GD-Z CONDUCTIVE WITH SQUARE NUT M8 Z WITH POSITION-FIXING

Code: 211349/8

Conductive mounting angle 45 GD-Z for safe aluminium profile connections with ESD protection. Prevents static discharge, ideal for sensitive equipment.

Link to the product →

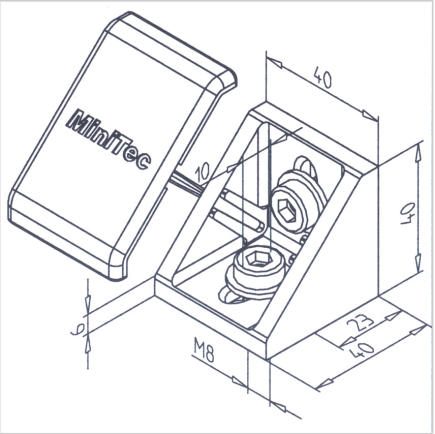

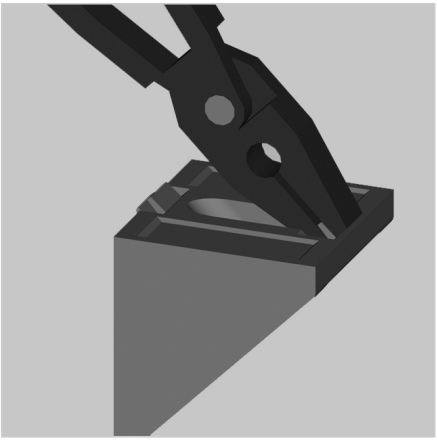

Technical data/items supplied

- Aluminium, Pressure die-casting, blasted
- With fastening material steel, zinc plated
- Weight = 0.088 kg/piece

Applications

- General constructions, particularly for subsequent insertion of profiles into existing constructions
- Fastening of surface elements, table tops
- Strengthening of profile constructions

Assembly

- Fasten to profile groove with supplied hardware
- Hammer head screw **part no.** 21.1370/0 can be used
- Recommended locking torque: 20 Nm