+386 (0)59 071 390
prodaja@minitec.si
04.02.2026

CHAIN PULLEY 32

Code: 211774/0

Chain pulley 32 for redirecting chains in counterweight-based lift doors.

Link to the product →

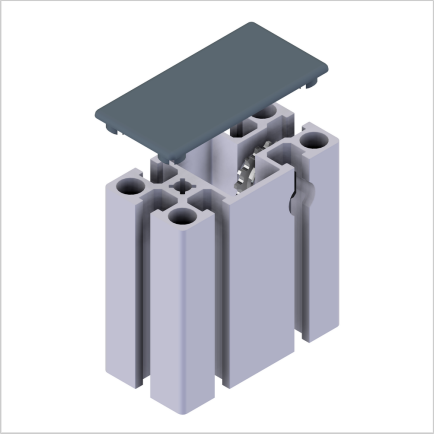

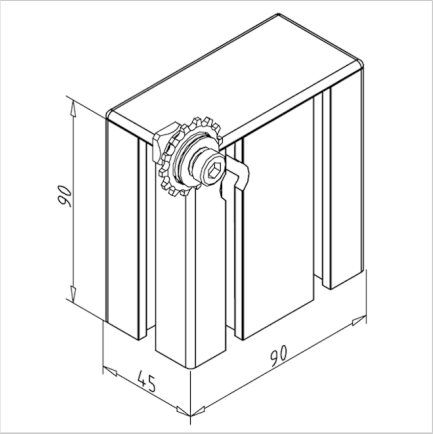

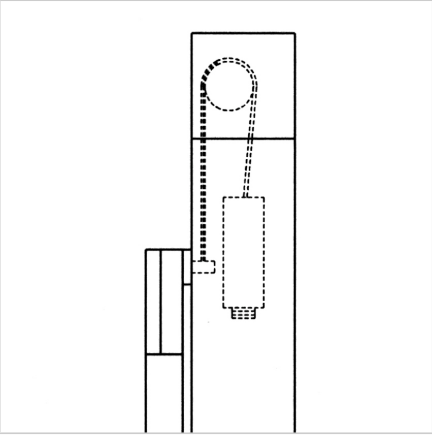

Technical data/items supplied

- Aluminium, anodized E6/EV1
- Housing from profile 45 x 90
- Sprocket galvanized steel, ready for installation
- End cap
- Maximum weight of the lifting door with paired insertion of the pulley, 50 kg
- Weight = 0.388 kg/piece

Applications

- Chain reverse unit of counterweights on lifting doors, for internal compensation weight in profile 45 x 90 F or 45 x 90 G

Assembly

- Attachment to the stand profile with 2 terminal strips 90 **part no.** 211029/0
- Use of chain 04 **part no.** 211713/0 and chain clamping weight **part no.** 211711/0
- The cable is guided in the profile groove, thus no hand-protection is required