+386 (0)59 071 390
prodaja@minitec.si
20.06.2026

DOORS FLOOR CABINET SMALL LEFT

Code: 320815/2

Workbench cabinet provides spacious storage for tools and materials, keeping the workstation neatly organized.

Link to the product →

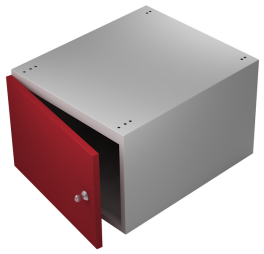

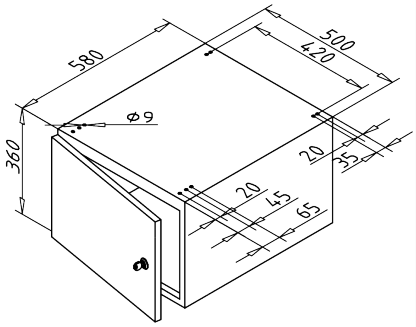

Technical data/items supplied

- Steel, lacquered
- With fastening material steel, zinc plated
- Cylinder lock with 2 keys, 1 shelf
- Max. load capacity per cabinet: 200 kg
- **Please specify the desired color(s) for the body and door!**
- The following colours can be delivered without additional price:
  - grey-green HF 0001 (similar to RAL 6000)
  - reseda green RAL 6011
  - light grey RAL 7035
  - light blue RAL 5012
  - ruby red RAL 3003
  - water blue RAL 5021
  - anthracite RAL 7016
  - red-orange RAL 2001
  - brilliant blue RAL 5007
  - silver aluminium similar to RAL 9006
- Weight = 33.100 kg/piece

Assembly

- Use fastening kit to fasten to base frame
- Alternatively attach with mounting set **part no.** 320806/0 to strut profiles of the base frame