+386 (0)59 071 390
prodaja@minitec.si
26.11.2026

END CAP 45X45 ALU

Code: 221067/2

Profile end cap 45 x 45. Aluminium end cap for sealing and protecting aluminium profile edges. Easy installation and reliable protection.

Link to the product →

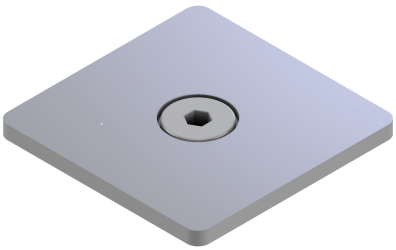

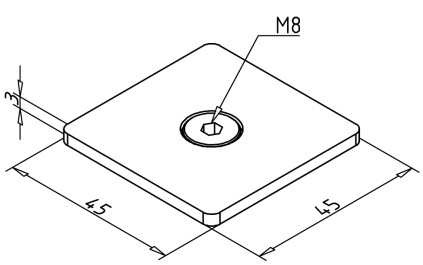

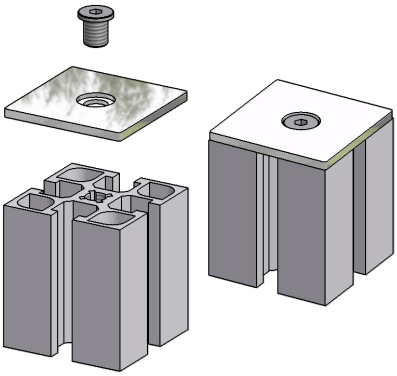

Technical data/items supplied

- Aluminium, anodized E6/EV1
- supplied with pan head screw M8
- Weight = 0.019 kg/piece

Applications

- Insert and screw on the thread M8 into the central hole in the end face of the profile

Assembly

- Mouth-side covering of profile ends of profile series 45
- Use at higher temperatures, chemically aggressive substances