+386 (0)59 071 390
prodaja@minitec.si
06.05.2026

MAGNETIC CATCH

Code: 211753/0

Reliable magnetic catch for swing doors with strong hold and quick release, suitable for fastening light surface elements.

Link to the product →

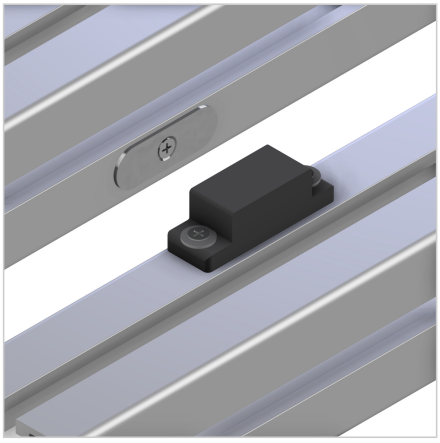

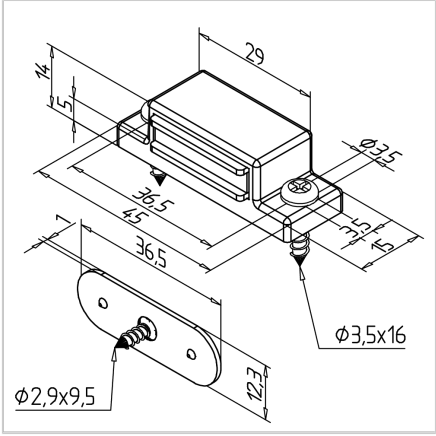

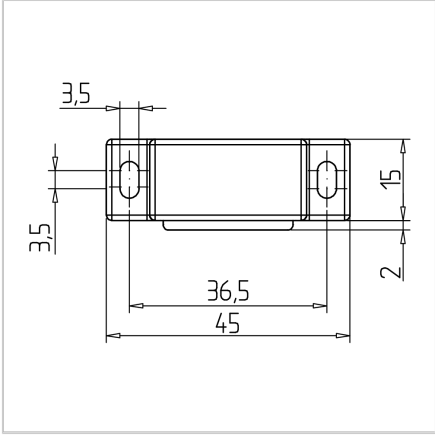

Technical data/items supplied

- PA, black
- Holding plate, steel, zinc plated
- With fastening material steel, zinc plated
- Holding force: 20 N
- Weight = 0.021 kg/piece

Applications

- Stop and quick-release of swing doors
- Fastening of light surface elements

Assembly

- Fasten with fixing material to profile panel