+386 (0)59 071 390
prodaja@minitec.si
19.12.2025

MOUNTING SYSTEM TOP 32

Code: E10055/0

Link to the product →

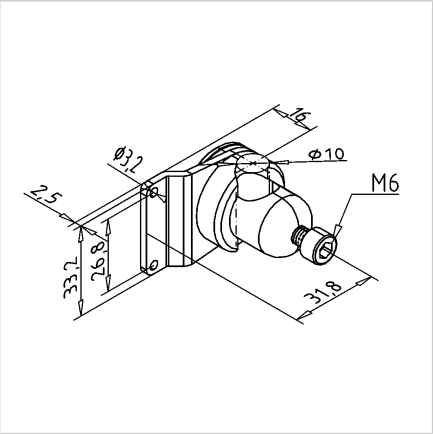

Technical data/items supplied

- Aluminium + steel
- Weight = 0.065 kg/piece