+386 (0)59 071 390
prodaja@minitec.si
27.11.2026

PROFILE 90X90 L

Code: 201010/0

Alu profile 90 x 90 L for industrial use. Explore our aluminium profile system – strong, modular, and easy to assemble.

Link to the product →



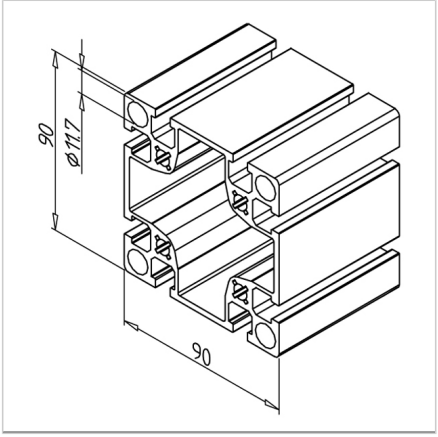

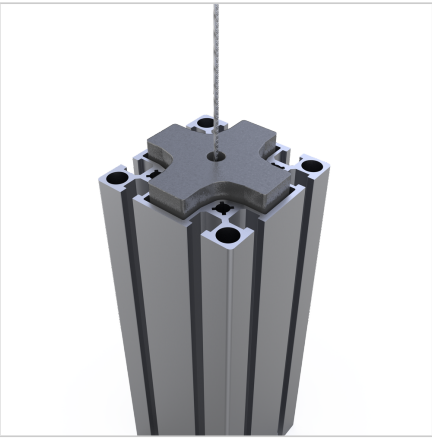

Technical data/items supplied

- Aluminium, extruded, anodized E6/EV1
- Ix = 186,26 cm4
- Iy = 186,26 cm4
- wx = 41,391 cm3
- wy = 41,391cm3
- IT = 378,232 cm4
- Weight = 5.222 kg/m
- Bar length = 6 m
- Packing unit = 12 m

Applications

- Weight optimized constructions
- Guide in the central hollow chamber for internal balancing weight for lifting doors

Assembly

- MiniTec power-lock fastener
- Mounting bracket 45 or 90
- Screw connection
- Bolt connector