+386 (0)59 071 390
prodaja@minitec.si
06.05.2026

ROTATION DIRECTION ROD LOCK 45, OR LOCK, 1 ROD

Code: 211788/3

Rod lock without lock, 1 rod – secure door closure for profile 45 systems. Ideal for control cabinets and protective enclosures.

Link to the product →

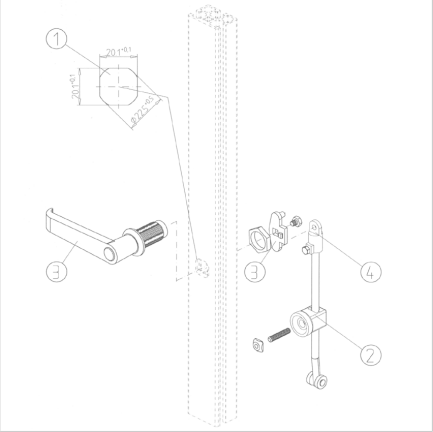

Technical data/items supplied

- Handle without lock
- Bar retainer made of steel, galvanised
  Overrun rod with rollers (L = 1100 mm), steel, galvanised
  Rod guide, black plastic with injected nut M6
- Weight = 0.711 kg/piece

Applications

- For locking doors at the top or bottom cross-rail
  Particularly suitable for control cabinets and double-leaf doors

Assembly

- Insert square recess into vertical door profile
  Screw setscrew M6 x 30 into rod guide, screw nut loosely onto setscrew, insert square nut into groove and tighten rod guide in position. Screw cam latch onto cam lock or handle. Insert the overrun rod into the rod guide and fix it on the cam latch