+386 (0)59 071 390
prodaja@minitec.si
23.11.2026

SEALING LIP PROFILE

Code: 221038/0

Sealing profile with an additional sealing edge for reliable sealing of doors, lids, and constructions against water, dust, and noise ingress.

Link to the product →

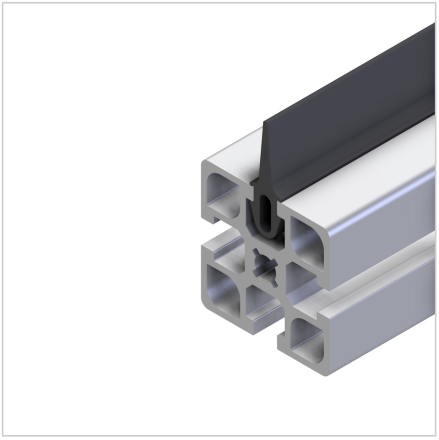

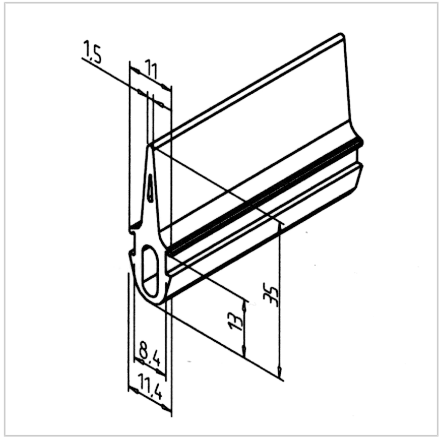

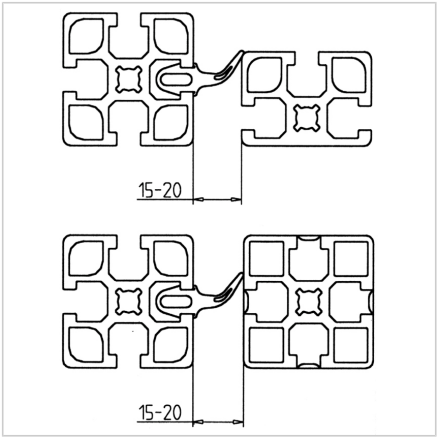

Technical data/items supplied

- NBR, black
- Hardness (Shore A) 60°
- Roll length 75 m
- Weight = 0.245 kg/m

Applications

- Sealing of doors, lids and other constructions against water, dust and noise

Assembly

- Press into profile groove