+386 (0)59 071 390
prodaja@minitec.si
06.05.2026

SLIDE LR 6 WITH COVER STAINLESS

Code: 280139/1

Stainless LR 6 linear slide with cover for reliable and precise motion on linear guides, protecting against dust and debris in extreme environments.

Link to the product →

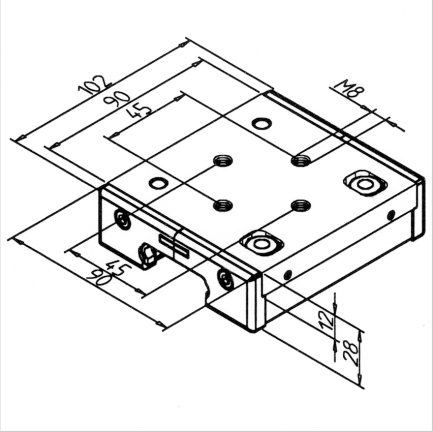

Technical data/items supplied

- Aluminium + steel
- 4 double row casters LR 6
- Installed with concentric mounting bolts
- Covers with lubricating felt
- Weight = 0.458 kg/piece

Applications

- MiniTec linear guide systems LR 6
- Handling devices
- Guide large drawers
- Doors
- For rail **part no.** 280525/0

Assembly

- Slip slide onto rail
- Adjust casters with an Allen wrench SW 2.5 free play
- Tighten casters with 15 Nm
- Saturate greasing felts with appropriate oil